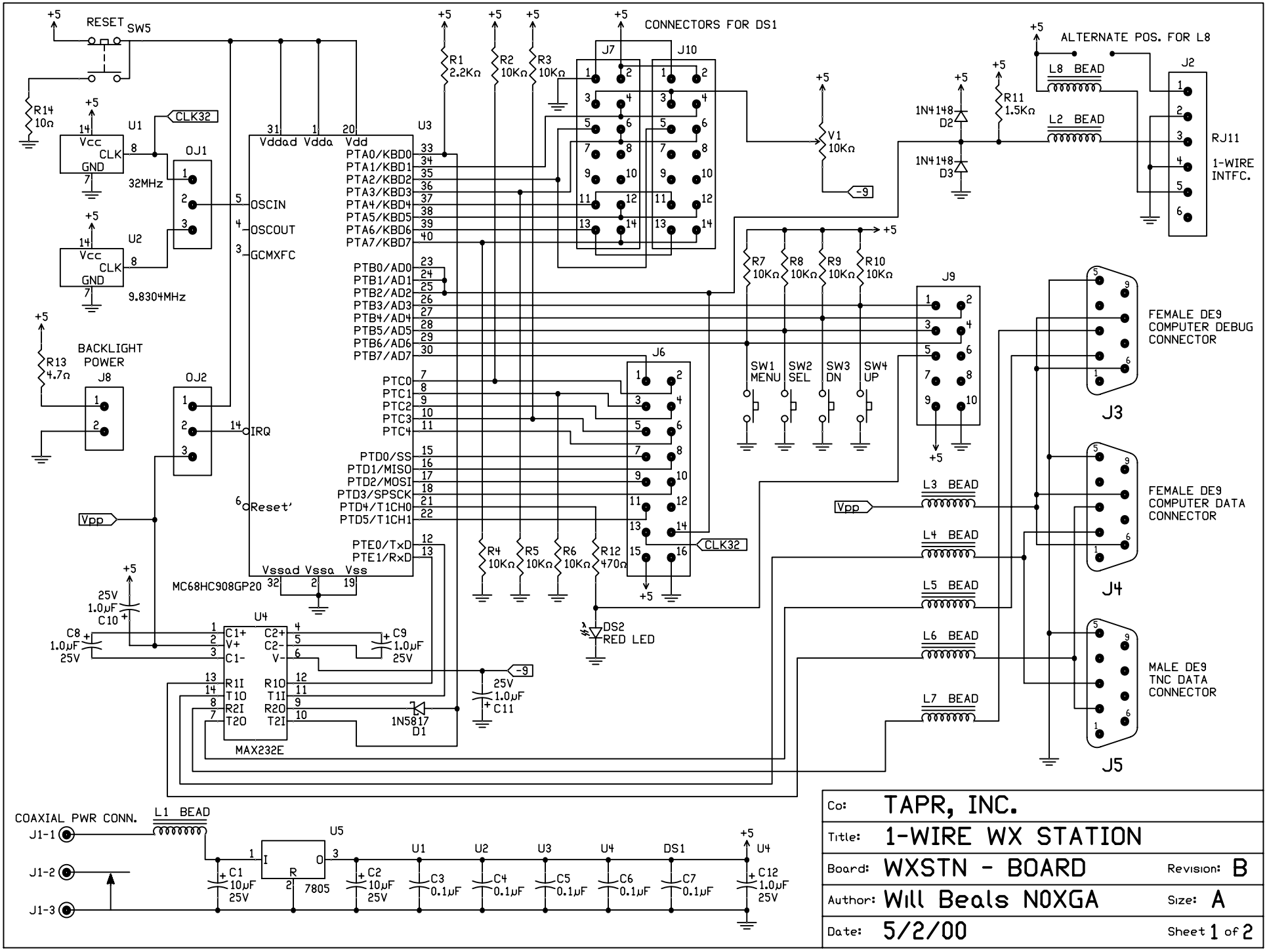
RESET
SW5
R14
10Ω
U1
Vcc
CLK
GND
32MHz
U2
9.8304MHz
CLK32
OJ1
OJ2
R13
4.7Ω
BACKLIGHT
POWER
J8
Vpp
U3
Vddad Vdda Vdd
OSCIN
OSCOUT
GCMXFC
IRQ
Reset'
Vssad Vssa Vss
MC68HC908GP20
PTA0/KBD0
PTA1/KBD1
PTA2/KBD2
PTA3/KBD3
PTA4/KBD4
PTA5/KBD5
PTA6/KBD6
PTA7/KBD7
PTB0/AD0
PTB1/AD1
PTB2/AD2
PTB3/AD3
PTB4/AD4
PTB5/AD5
PTB6/AD6
PTB7/AD7
PTC0
PTC1
PTC2
PTC3
PTC4
PTD0/SS
PTD1/MISO
PTD2/MOSI
PTD3/SPSCK
PTD4/T1CH0
PTD5/T1CH1
PTE0/TxD
PTE1/RxD
R1
2.2KΩ
R2
10KΩ
R3
10KΩ
R4
10KΩ
R5
10KΩ
R6
10KΩ
R12
470Ω
CONNECTORS FOR DS1
J7
J10
J6
V1
10KΩ
-9
DS2
RED LED
U4
MAX232E
C8
1.0µF
25V
C10
1.0µF
25V
C9
1.0µF
25V
C11
1.0µF
25V
1N5817
D1
R7
10KΩ
R8
10KΩ
R9
10KΩ
R10
10KΩ
J9
SW1
MENU
SW2
SEL
SW3
DN
SW4
UP
1N4148
D2
1N4148
D3
R11
1.5KΩ
ALTERNATE POS. FOR L8
L8 BEAD
L2 BEAD
J2
RJ11
1-WIRE
INTFC.
L3 BEAD
L4 BEAD
L5 BEAD
L6 BEAD
L7 BEAD
FEMALE DE9
COMPUTER DEBUG
CONNECTOR
J3
FEMALE DE9
COMPUTER DATA
CONNECTOR
J4
MALE DE9
TNC DATA
CONNECTOR
J5
COAXIAL PWR CONN.
J1-1
J1-2
J1-3
L1 BEAD
U5
7805
C1
10µF
25V
C2
10µF
25V
C3
0.1µF
C4
0.1µF
C5
0.1µF
C6
0.1µF
C7
0.1µF
C12
1.0µF
25V
Co: TAPR, INC.
Title: 1-WIRE WX STATION
Board: WXSTN - BOARD
Revision: B
Author: Will Beals N0XGA
Size: A
Date: 5/2/00
Sheet 1 of 2